GAS SUBATMOSPHERIC (VACUUM)
SAMPLE SYSTEM

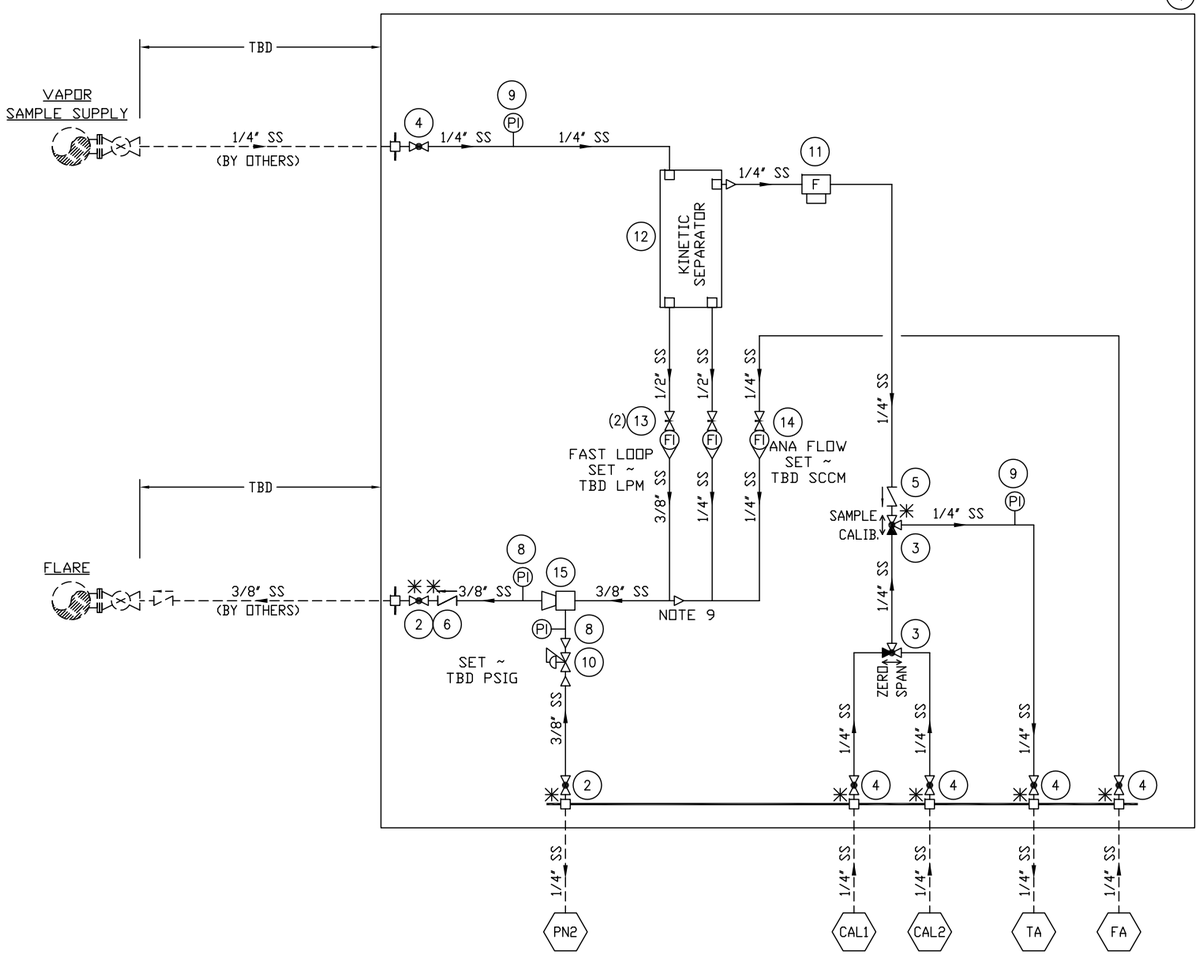

NOTE:
THIS DRAWING IS FOR REFERENCE ONLY AND
SHOULD NOT BE USED FOR FABRICATION.
CONSULT A ANALYZER SYSTEMS ENGINEER
FOR SPECIFIC APPLICATIONS AND REQUIREMENTS.

BILL OF MATERIAL

ITEM	QTY	DESCRIPTION	MANUFACTURER	PART NUMBER
1	1	PLATE, ALUMINUM, 36" H X 30" W X 3/16" THICK	-	-
2	2	VALVE, BALL, 3/8" TF (SS)	-	-
3	2	VALVE, BALL, 3-WAY, 1/4" TF (SS)	-	-
4	5	VALVE, BALL, 1/4" TF (SS)	-	-
5	1	VALVE, CHECK, 1/3 PSIG, 3/8" TF (SS)	-	-
6	1	VALVE, CHECK, 1/3 PSIG, 3/8" TF (SS)	-	-
7	-	-	-	-
8	2	GAUGE, PRESS., (2.5",GF), 100 PSIG, 1/4"TF-CBM (SS)	-	-
9	2	GAUGE, COMPOUND, (2.5",GF), -3-0-15 PSIG, 1/4"TF-CBM (SS)	-	-
10	1	REGULATOR, PRESS., 0-100 PSIG, 1/4"NPT-F, (SS)	-	-
11	1	FILTER, 2. MICRON 2-1/4" ELEMENT, 1/4" NPT-F (SS)	-	-
12	1	KINETIC SEPARATOR, 12" FOR VAPOR SERVICE (SS)	SHEFFIELD	SS1200GF
13	2	FLOW METER W/VALVE, (GLASS), TBD GPH, 1/4"NPT-F(SS)	-	-
14	1	FLOW METER W/VALVE, (GLASS), 30SCCM, 1/4"NPT-F (SS)	-	-
15	1	EDUCTOR, 3/8 "NPT-F, (SS)	-	-
			-	-

FILELD CONNECTION LEGEND

- CAL1 - VAPOR CALIBRATION 1
- CAL2 - VAPOR CALIBRATION 2
- TA - SAMPLE TO ANALYZER
- FA - SAMPLE FROM ANALYZER
- PN2 - PLANT NITROGEN
- FL - FLARE

TUBE CONNECTION LEGEND

- BULKHEAD FITTING
- REDUCE TUBE SIZE
- CLOSE COUPLE (AS SHORT AS PRACTICAL)

SAMPLE SYSTEM NOTES

1. TUBING SHALL BE TYPE 316 SEAMLESS, BRIGHT ANNEALED, STAINLESS STEEL WITH O.D. AS SHOWN AND WALL THICKNESS AS FOLLOWS:
   1/4" O.D. - 0.028" WALL
   1/4" O.D. - 0.035" WALL
   3/8" O.D. - 0.035" WALL
   1/2" O.D. - 0.049" WALL
2. TUBE FITTINGS SHALL BE 316 STAINLESS STEEL.
3. ALL MOUNTING HARDWARE (NUTS, BOLTS, WASHERS, ETC.) TO BE 316SS.
4. TUBING SHALL BE CUT SQUARE, REAMED TO THE INSIDE DIAMETER, AND FILED SMOOTH WITH NO BURRS OR SHARP EDGES. TUBING SHALL BE BLOWN CLEAN WITH DRY AIR TO REMOVE FILINGS AFTER CUTTING.
5. COMPONENTS SHALL BE INSTALLED WITH FRONT ACCESS ONLY TO ALLOW CONVENIENT REMOVAL.
6. NPT CONNECTIONS TO COMPONENTS SHALL BE MADE WITH TEFLON TAPE.
7. TUBING SHALL TERMINATE AT BULKHEAD FITTINGS.
8. TUBING SHALL BE SUPPORTED TO PREVENT DAMAGE (MAX. SPAN OF 3 FEET) BUT ALLOW CONVENIENT ACCESS FOR REMOVAL OF COMPONENTS.
9. WHEN AN ANALYZER IS EQUIPPED WITH A SAMPLE PUMP; THE ANALYZER SLIP STREAM RETURN MUST TIE-IN TO THE DISCHARGE SIDE OF THE SAMPLE SYSTEM EDUCTOR.

SHEFFIELD SEPARATOR

REV.	DESCRIPTION	BY	CHK	APP.	DATE
A	ISSUE FOR REFERENCE	X	X	X	1/08

TITLE	GAS SUBATMOSPHERIC (VACUUM) SCHEMATIC
JOB. NO. 0801	SCALE N.T.S.
DWG. NO. 0801-01-503	REVISION A